Terminal Strips 1.5 mm²/AWG 14 and 2.5 mm²/AWG 12, Press In Technique
Pin spacings 3.5 mm / 0.138 in, 5 mm / 0.197 in and 7.5 mm / 0.295 in; Series 739

Pin spacing 3.5 mm / 0.138 in	Pin spacing 3.5 mm / 0.138 in	Pin spacing 5 mm / 0.197 in
0.08 – 1.5 mm² | AWG 28 – 14	0.08 – 1.5 mm² | AWG 28 – 14	0.08 – 2.5 mm² | AWG 28 – 12
250 V/2.5 kV/2 | 300 V, 4 A	250 V/2.5 kV/2 | 300 V	250 V/4 kV/3 | 300 V, 8 A
4 A	4 A	8 A
5 – 6 mm / 0.22 in	5 – 6 mm / 0.22 in	8 – 9 mm / 0.33 in
*		*

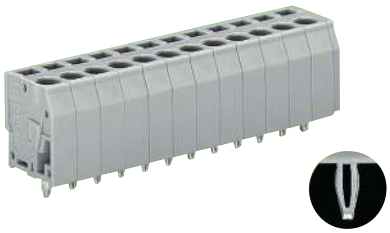

No. of poles	Item No.	Pack.-unit pcs
Terminal strips, Press In technique, grey, standard lengths, **1 press-in pin/pole**		
3	**739-303/100-000**	400 (4 x 100)
4	**739-304/100-000**	300 (4 x 75)
5	**739-305/100-000**	240 (4 x 60)
6	**739-306/100-000**	200 (4 x 50)
7	**739-307/100-000**	180 (4 x 45)
8	**739-308/100-000**	160 (4 x 40)
9	**739-309/100-000**	140 (4 x 35)
10	**739-310/100-000**	120 (4 x 30)
12	**739-312/100-000**	100 (4 x 25)
For other lengths, please contact factory		

No. of poles	Item No.	Pack.-unit pcs
Terminal strips with fixing flanges, Press In-Technique, grey, standard lengths, **1 press-in pin/pole**		
2	**739-302/100-000/001-000**	200 (4 x 50)
3	**739-303/100-000/001-000**	180 (4 x 45)
4	**739-304/100-000/001-000**	140 (4 x 35)
5	**739-305/100-000/001-000**	140 (4 x 35)
6	**739-306/100-000/001-000**	120 (4 x 30)
7	**739-307/100-000/001-000**	100 (4 x 25)
8	**739-308/100-000/001-000**	100 (4 x 25)
9	**739-309/100-000/001-000**	80 (4 x 20)
10	**739-310/100-000/001-000**	80 (4 x 20)
12	**739-312/100-000/001-000**	80 (4 x 20)
For other lengths, please contact factory.		

No. of poles	Item No.	Pack.-unit pcs
Terminal strips, Press In technique, grey, standard lengths, **1 press-in pin/pole**		
3	**739-103/100-000**	280 (4 x 70)
4	**739-104/100-000**	220 (4 x 55)
5	**739-105/100-000**	180 (4 x 45)
6	**739-106/100-000**	140 (4 x 35)
7	**739-107/100-000**	120 (4 x 30)
8	**739-108/100-000**	100 (4 x 25)
9	**739-109/100-000**	100 (4 x 25)
10	**739-110/100-000**	80 (4 x 20)
12	**739-112/100-000**	60 (4 x 15)
Additional item nos. for colored terminal strips		
black	**.../100-004**	
red	**.../100-005**	
blue	**.../100-006**	
brown	**.../100-014**	
light green	**.../100-017**	
green	**.../100-023**	
For other lengths, please contact factory		

Accessories

Marker card, 80 self-adhesive strips per card

1 – 16 (240 x)	**210-332/0350-0202**	1 card

Tapping screw,

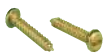

B 2.2 x 9.5
Fixing hole Ø 1.8 mm

209-147	200 (2 x 100)	

Marker cards, 80 self-adhesive strips per card

1 – 16 (160 x)	**210-332/0500-0202**	1 card
17 – 32 (160 x)	**210-332/0500-0204**	1 card
1 – 32 (80 x)	**210-332/0500-0205**	1 card

Dimensions (in mm)

L1 = No. of poles x pin spacing **L2 = L1 + 8.8 mm** **L3 = L1 + 14.8 mm**

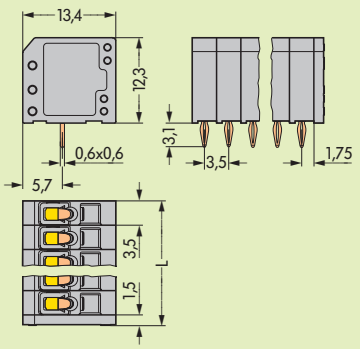

Diameter of metal-plated hole: Ø $1.0^{\pm 0.09}_{\pm 0.06}$ mm
Recommended diam. of drilled hole: $1.15^{\pm 0.025}$ mm
L = No. of poles x pin spacing + 1.5 mm

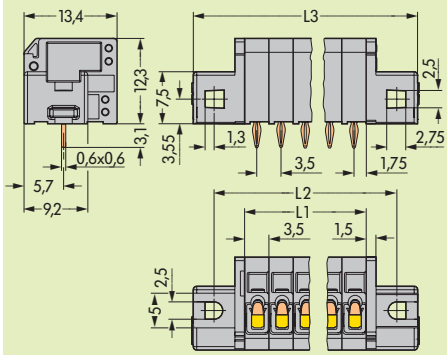

Diameter of metal-plated hole: Ø $1.0^{\pm 0.09}_{\pm 0.06}$ mm
Recommended diam. of drilled hole: $1.15^{\pm 0.025}$ mm

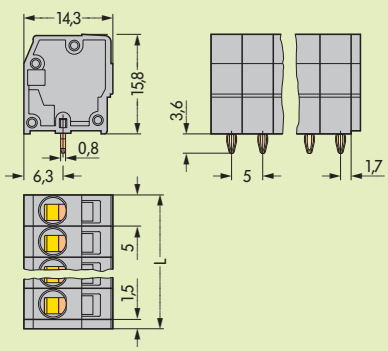

Diameter of metal-plated hole: Ø $1.45^{\pm 0.09}_{\pm 0.06}$ mm
Recommended diam. of drilled hole: Ø $1.6^{\pm 0.025}$ mm
L = No. of poles x pin spacing + 1.5 mm

* Approvals with corresponding ratings see pages 12.3 ff.

Pin spacing 7.5 mm / 0.295 in
0.08 – 2.5 mm² | **AWG 28 – 12**
400 V/6 kV/3 | **300 V, 8 A**
8 A

8 – 9 mm / 0.33 in

*

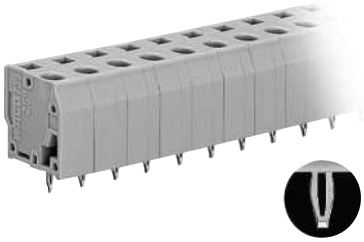

No. of poles	Item No.	Pack.-unit pcs
Terminal strips, PressIn technique,		
grey, standard lengths,		
1 press-in pin/pole		
3	**739-203/100-000**	220 (4 x 55)
4	**739-204/100-000**	160 (4 x 40)
5	**739-205/100-000**	120 (4 x 30)
6	**739-206/100-000**	100 (4 x 25)
7	**739-207/100-000**	80 (4 x 20)
8	**739-208/100-000**	80 (4 x 20)
9	**739-209/100-000**	60 (4 x 15)
10	**739-210/100-000**	60 (4 x 15)
12	**739-212/100-000**	40 (4 x 10)
For other lengths, please contact factory		
Marker card, 80 self-adhesive strips per card		
1 – 20 (80 x)	**210-332/0750-0020**	1 card

Special features of the WAGO PressIn technique:

- press-in pin with special elastic contact zone according to the needle eye principle
- suitable for all printed circuit boards with the correct tin plating for PressIn connectors
- mechanically stable pin dimensions
  – 0.6 mm x 0.6 mm
  – 0.8 mm x 0.8 mm
- metal-plated hole with optimum diameter
  – 1.0 or $1.45^{+0.09}_{-0.06}$ mm
- press-in pin for PCB thickness from 1.4 mm to 3 mm – (similar to DIN EN 60352-5 EE 1.45 standard)
- press-in length of approx 3.2 mm long
  – no unnecessary projection on underside of PCB
- low press-in force required
  – advantage for both PCB and components
- high retention force within the PCB
  – (double the values required by DIN EN 60352-5)
- good bonded connection
- excellent elastic spring behavior
- no deformation of the metal-plated end hole
- length of the contact area ≥ 1.3 mm
- no deformation of multilayer PCBs
- only slight tin removal in the contact hole
  – advantage for PCB and the contact points
- application specific press-in tool – contact factory

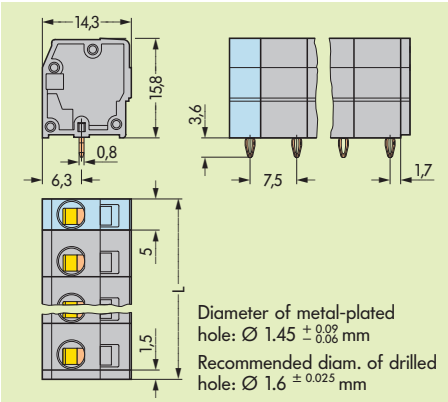

L = (No. of poles – 1) x pin spacing + 5 mm + 1.5 mm

Terminal Strips 1.5 mm²/AWG 14 and 2.5 mm²/AWG 12, Pin spacings 3.5 mm / 0.138 in, 5 mm / 0.197 in and 7.5 mm / 0.295 in; Series 739

Pin spacing 3.5 mm / 0.138 in	Pin spacing 3.5 mm / 0.138 in	Pin spacing 5 mm / 0.197 in
0.08 – 1.5 mm²	0.08 – 1.5 mm²	0.08 – 2.5 mm²
250 V/2.5 kV/2	250 V/2.5 kV/2	250 V/4 kV/3
6 A	6A	12 A
AWG 28 – 14	AWG 28 – 14	AWG 28 – 12
300 V, 6 A	300 V	300 V, 12 A
5 – 6 mm / 0.22 in	5 – 6 mm / 0.22 in	8 – 9 mm / 0.33 in
*		*

No. of poles	Item No.	Pack.-unit pcs
Terminal strips, grey, standard lengths,		
1 solder pin/pole		
2	**739-302**	560 (4 x 140)
3	**739-303**	400 (4 x 100)
4	**739-304**	300 (4 x 75)
5	**739-305**	240 (4 x 60)
6	**739-306**	200 (4 x 50)
7	**739-307**	180 (4 x 45)
8	**739-308**	160 (4 x 40)
9	**739-309**	140 (4 x 35)
10	**739-310**	120 (4 x 30)
12	**739-312**	100 (4 x 25)
For other lengths, please contact factory		

No. of poles	Item No.	Pack.-unit pcs
Terminal strips with fixing flanges, grey, standard lengths,		
1 solder pin/pole		
2	**739-302/001-000**	200 (4 x 50)
3	**739-303/001-000**	180 (4 x 45)
4	**739-304/001-000**	140 (4 x 35)
5	**739-305/001-000**	140 (4 x 35)
6	**739-306/001-000**	120 (4 x 30)
7	**739-307/001-000**	100 (4 x 25)
8	**739-308/001-000**	100 (4 x 25)
9	**739-309/001-000**	80 (4 x 20)
10	**739-310/001-000**	80 (4 x 20)
12	**739-312/001-000**	80 (4 x 20)
For other lengths, please contact factory		

No. of poles	Item No.	Pack.-unit pcs
Terminal strips, grey, standard lengths, for other lengths, please contact factory		
1 solder pin/pole		
2	**739-102**	400 (4 x 100)
3	**739-103**	280 (4 x 70)
4	**739-104**	220 (4 x 55)
5	**739-105**	180 (4 x 45)
6	**739-106**	140 (4 x 35)
7	**739-107**	120 (4 x 30)
8	**739-108**	100 (4 x 25)
9	**739-109**	100 (4 x 25)
10	**739-110**	80 (4 x 20)
12	**739-112**	60 (4 x 15)
16	**739-116**	40 (4 x 10)
24	**739-124**	20 (4 x 5)
Additional item nos. for colored terminal strips		
black	.../...**-004**	
red	.../...**-005**	
blue	.../...**-006**	
brown	.../...**-014**	
light green	.../...**-017**	
green	.../...**-023**	

Accessories

Marker card, 80 self-adhesive strips per card

1 – 16 (240 x)	**210-332/0350-0202**	1 card

Tapping screw,

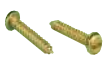

B 2.2 x 9.5
Fixing hole Ø 1.8 mm

209-147	200 (2 x 100)	

Marker cards, 80 self-adhesive strips per card

1 – 16 (160 x)	**210-332/0500-0202**	1 card
17 – 32 (160 x)	**210-332/0500-0204**	1 card
1 – 32 (80 x)	**210-332/0500-0205**	1 card

Dimensions (in mm)

L1 = No. of poles x pin spacing **L2 = L1 + 8.8 mm** **L3 = L1 + 14.8 mm**

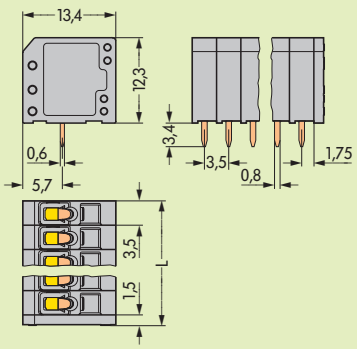

Diameter of drilled hole: 1.1 +0.1 mm
L = No. of poles x pin spacing + 1.5 mm

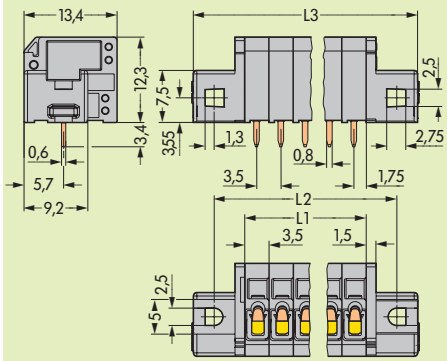

Diameter of drilled hole: 1.1 +0.1 mm

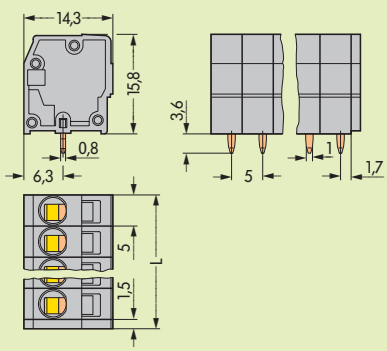

Diameter of drilled hole: 1.6 +0.1 mm
L = (No. of poles - 1) x pin spacing + 5 mm + 1.5 mm

* Approvals with corresponding ratings see pages 12.3 ff.

Pin spacing 7.5 mm / 0.295 in

0.08 – 2.5 mm² | **AWG 28 – 12**
400 V/6 kV/3 | **300 V, 12 A**
12 A | **300 V, 8 A**

8 – 9 mm / 0.33 in

*

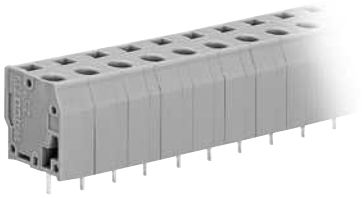

No. of poles	Item No.	Pack.-unit pcs
Terminal strips,		
grey, standard lengths,		
1 solder pin/pole		
2	**739-202**	340 (4 x 85)
3	**739-203**	220 (4 x 55)
4	**739-204**	160 (4 x 40)
5	**739-205**	120 (4 x 30)
6	**739-206**	100 (4 x 25)
7	**739-207**	80 (4 x 20)
8	**739-208**	80 (4 x 20)
9	**739-209**	60 (4 x 15)
10	**739-210**	60 (4 x 15)
12	**739-212**	40 (4 x 10)
For other lengths, please contact factory		

Marker card, 80 self-adhesive strips per card

1 – 20 (80 x)	**210-332/0750-0020**	1 card

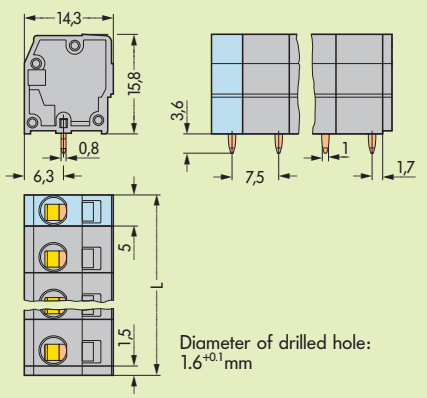

L = (No. of poles – 1) x pin spacing + 5 mm + 1.5 mm

Terminal Strips 1.5 mm²/AWG 14 and 2.5 mm²/AWG 12, Press In Technique
Pin spacings 3.81 mm / 0.15 in, 5.08 mm / 0.2 in and 7.62 mm / 0.3 in; Serie 739

Pin spacing 3.81 mm / 0.15 in	Pin spacing 3.81 mm / 0.15 in	Pin spacing 5.08 mm / 0.2 in
0.08 – 1.5 mm² | AWG 28 – 14	0.08 – 1.5 mm² | AWG 28 – 14	0.08 – 2.5 mm² | AWG 28 – 12
250 V/2.5 kV/2 | 300 V, 4 A	250 V/2.5 kV/2 | 300 V	250 V/4 kV/3 | 300 V, 8 A
4 A	4 A	8 A
5 – 6 mm / 0.22 in	5 – 6 mm / 0.22 in	8 – 9 mm / 0.33 in
*		*

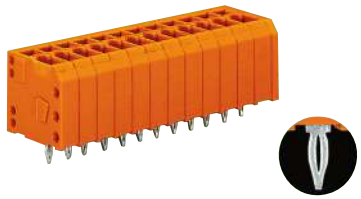

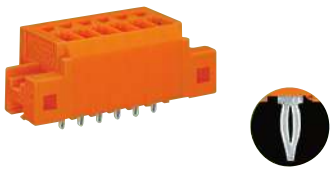

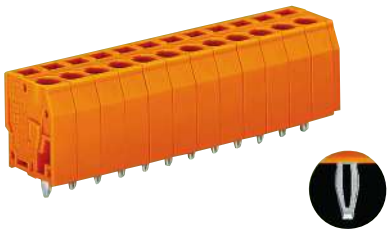

No. of poles	Item No.	Pack.-unit pcs
Terminal strips, Press In technique, orange, standard lengths, **1 press-in pin/pole**		
3	**739-333/100-000**	360 (4 x 90)
4	**739-334/100-000**	280 (4 x 70)
5	**739-335/100-000**	220 (4 x 55)
6	**739-336/100-000**	180 (4 x 45)
7	**739-337/100-000**	160 (4 x 40)
8	**739-338/100-000**	140 (4 x 35)
9	**739-339/100-000**	120 (4 x 30)
10	**739-340/100-000**	120 (4 x 30)
12	**739-342/100-000**	100 (4 x 25)
For other lengths, please contact factory		

No. of poles	Item No.	Pack.-unit pcs
Terminal strips with fixing flanges, Press In technique, orange, standard lengths, **1 press-in pin/pole**		
2	**739-332/100-000/001-000**	200 (4 x 50)
3	**739-333/100-000/001-000**	160 (4 x 40)
4	**739-334/100-000/001-000**	140 (4 x 35)
5	**739-335/100-000/001-000**	120 (4 x 30)
6	**739-336/100-000/001-000**	120 (4 x 30)
7	**739-337/100-000/001-000**	100 (4 x 25)
8	**739-338/100-000/001-000**	100 (4 x 25)
9	**739-339/100-000/001-000**	80 (4 x 20)
10	**739-340/100-000/001-000**	80 (4 x 20)
12	**739-342/100-000/001-000**	60 (4 x 15)
For other lengths, please contact factory		

No. of poles	Item No.	Pack.-unit pcs
Terminal strips, Press In technique, orange, standard lengths, **1 press-in pin/pole**		
3	**739-153/100-000**	280 (4 x 70)
4	**739-154/100-000**	220 (4 x 55)
5	**739-155/100-000**	160 (4 x 40)
6	**739-156/100-000**	140 (4 x 35)
7	**739-157/100-000**	120 (4 x 30)
8	**739-158/100-000**	100 (4 x 25)
9	**739-159/100-000**	100 (4 x 25)
10	**739-160/100-000**	80 (4 x 20)
12	**739-162/100-000**	60 (4 x 15)
For other lengths, please contact factory		

Accessories

Marker card, 80 self-adhesive strips per card

1 – 16 (160 x)	**210-332/0381-0202**	1 card

Tapping screw,

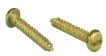

B 2.2 x 9.5
Fixing hole Ø 1.8 mm

209-147	200 (2 x 100)	

Marker cards, 80 self-adhesive strips per card

1 – 16 (160 x)	**210-332/0508-0202**	1 card
17 – 32 (160 x)	**210-332/0508-0204**	1 card
1 – 32 (80 x)	**210-332/0508-0205**	1 card

Dimensions (in mm)

L1 = No. of poles x pin spacing **L2 = L1 + 8.8 mm** **L3 = L1 + 14.8 mm**

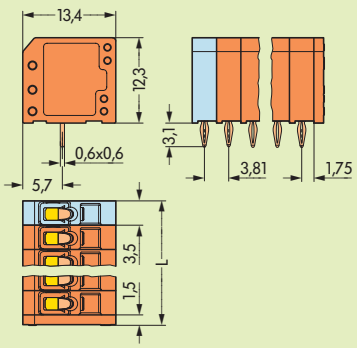

Diameter of metal-plated hole: Ø $1.0^{+0.09}_{-0.06}$ mm
Recommended diam. of drilled hole: $1.15^{+0.025}$ mm
L = (No. of poles 1) x pin spacing + 3.5 mm + 1.5 mm

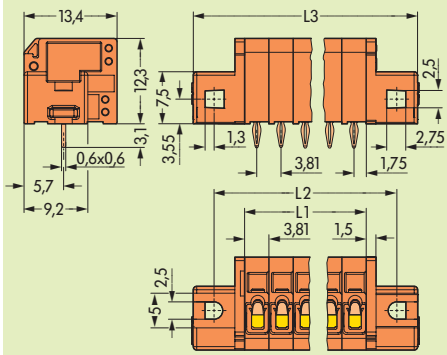

Metallisiertes Loch Ø $1,0^{+0,09}_{-0,06}$ mm
Empf. Bohrloch Ø $1,15^{+0,025}$ mm

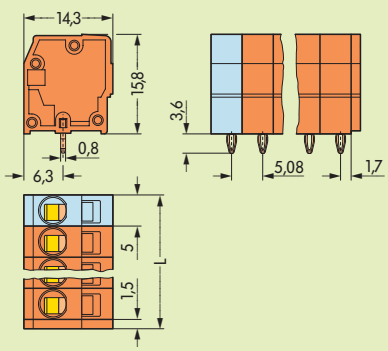

Diameter of metal-plated hole: Ø $1.45^{+0.09}_{-0.06}$ mm
Recommended diam. of drilled hole: Ø $1.6^{+0.025}$ mm
L = (No. of poles - 1) x pin spacing + 5 mm + 1.5 mm

* Approvals with corresponding ratings see pages 12.3 ff.

Pin spacing 7.62 mm / 0.3 in
0.08 – 2.5 mm² | **AWG 28 – 12**
400 V/6 kV/3 | **300 V, 8 A**
8 A

8 – 9 mm / 0.33 in

*

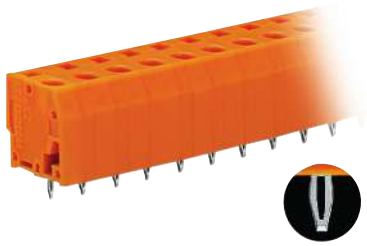

No. of poles	Item No.	Pack.-unit pcs
Terminal strips, PressIn technique,		
orange, standard lengths,		
1 press-in pin/pole		
3	**739-233/100-000**	220 (4 x 55)
4	**739-234/100-000**	160 (4 x 40)
5	**739-235/100-000**	120 (4 x 30)
6	**739-236/100-000**	100 (4 x 25)
7	**739-237/100-000**	80 (4 x 20)
8	**739-238/100-000**	80 (4 x 20)
9	**739-239/100-000**	60 (4 x 15)
10	**739-240/100-000**	60 (4 x 15)
12	**739-242/100-000**	40 (4 x 10)
For other lengths, please contact factory		
Marker card, 80 self-adhesive strips per card		
1 – 20 (80 x)	**210-332/0762-0020**	1 card

Special features of the WAGO PressIn technique:

- press-in pin with special elastic contact zone according to the needle eye principle
- suitable for all printed circuit boards with the correct tin plating for PressIn connectors
- mechanically stable pin dimensions
  – 0.6 mm x 0.6 mm
  – 0.8 mm x 0.8 mm
- metal-plated hole with optimum diameter
  – 1.0 or 1.45 $^{+0.09}_{-0.06}$ mm
- press-in pin for PCB thickness from 1.4 mm to 3 mm – (similar to DIN EN 60352-5 EE 1.45 standard)
- press-in length of approx 3.2 mm long
  – no unnecessary projection on underside of PCB
- low press-in force required
  – advantage for both PCB and components
- high retention force within the PCB
  – (double the values required by DIN EN 60352-5)
- good bonded connection
- excellent elastic spring behavior
- no deformation of the metal-plated end hole
- length of the contact area ≥ 1.3 mm
- no deformation of multilayer PCBs
- only slight tin removal in the contact hole
  – advantage for PCB and the contact points
- application specific press-in tool – contact factory

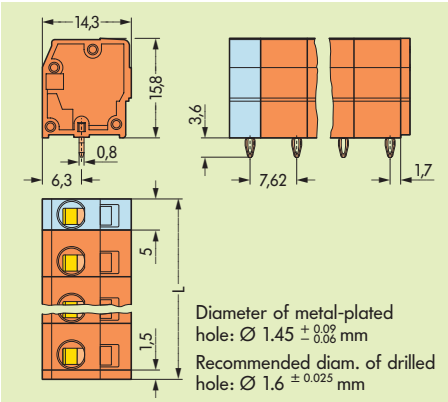

L = (No. of poles – 1) x pin spacing + 5 mm + 1.5 mm

Terminal Strips 1.5 mm²/AWG 14 and 2.5 mm²/AWG 12, Pin spacings 3.81 mm / 0.15 in, 5.08 mm / 0.2 in and 7.62 mm / 0.3 in; Serie 739

Pin spacing 3.81 mm / 0.15 in	Pin spacing 3.81 mm / 0.15 in	Pin spacing 5.08 mm / 0.2 in
0.08 – 1.5 mm² | AWG 28 – 14	0.08 – 1.5 mm² | AWG 28 – 14	0.08 – 2.5 mm² | AWG 28 – 12
250 V/2.5 kV/2 | 300 V, 6 A	250 V/2.5 kV/2 | 300 V	250 V/4 kV/3 | 300 V, 12 A
6 A	6 A	12 A
5 – 6 mm / 0.22 in	5 – 6 mm / 0.22 in	8 – 9 mm / 0.33 in
*		*

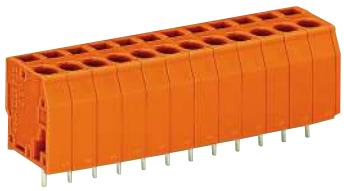

No. of poles	Item No.	Pack.-unit pcs
Terminal strips, orange, standard lengths, **1 solder pin/pole**		
2	**739-332**	520 (4 x 130)
3	**739-333**	360 (4 x 90)
4	**739-334**	280 (4 x 70)
5	**739-335**	220 (4 x 55)
6	**739-336**	180 (4 x 45)
7	**739-337**	160 (4 x 40)
8	**739-338**	140 (4 x 35)
9	**739-339**	120 (4 x 30)
10	**739-340**	120 (4 x 30)
12	**739-342**	100 (4 x 25)
For other lengths, please contact factory		

No. of poles	Item No.	Pack.-unit pcs
Terminal strips with fixing flanges, orange, standard lengths, **1 solder pin/pole**		
2	**739-332/001-000**	200 (4 x 50)
3	**739-333/001-000**	160 (4 x 40)
4	**739-334/001-000**	140 (4 x 35)
5	**739-335/001-000**	120 (4 x 30)
6	**739-336/001-000**	120 (4 x 30)
7	**739-337/001-000**	100 (4 x 25)
8	**739-338/001-000**	100 (4 x 25)
9	**739-339/001-000**	80 (4 x 20)
10	**739-340/001-000**	80 (4 x 20)
12	**739-342/001-000**	60 (4 x 15)
For other lengths, please contact factory		

No. of poles	Item No.	Pack.-unit pcs
Terminal strips, orange, standard lengths, **1 solder pin/pole**		
2	**739-152**	400 (4 x 100)
3	**739-153**	280 (4 x 70)
4	**739-154**	220 (4 x 55)
5	**739-155**	160 (4 x 40)
6	**739-156**	140 (4 x 35)
7	**739-157**	120 (4 x 30)
8	**739-158**	100 (4 x 25)
9	**739-159**	100 (4 x 25)
10	**739-160**	80 (4 x 20)
12	**739-162**	60 (4 x 15)
16	**739-166**	40 (4 x 10)
24	**739-174**	20 (4 x 5)
For other lengths, please contact factory		

Accessories

Marker card, 80 self-adhesive strips per card

1 – 16 (160 x)	**210-332/0381-0202**	1 card

Tapping screw,

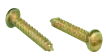

B 2.2 x 9.5
Fixing hole Ø 1.8 mm

209-147	200 (2 x 100)	

Marker cards, 80 self-adhesive strips per card

1 – 16 (160 x)	**210-332/0508-0202**	1 card
17 – 32 (160 x)	**210-332/0508-0204**	1 card
1 – 32 (80 x)	**210-332/0508-0205**	1 card

Dimensions (in mm)

L1 = No. of poles x pin spacing **L2 = L1 + 8.8 mm** **L3 = L1 + 14.8 mm**

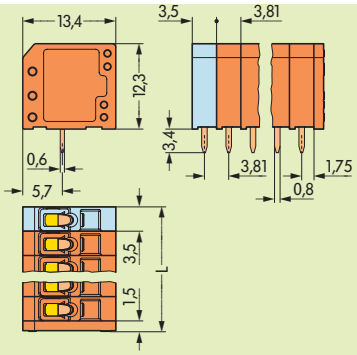

Diameter of drilled hole: $1.1^{+0.1}$ mm
L = (No. of poles 1) x pin spacing + 3.5 mm + 1.5 mm

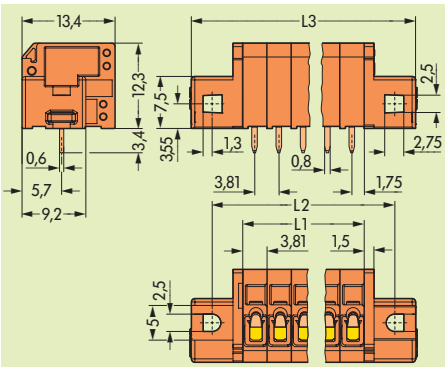

Diameter of drilled hole: $1.1^{+0.1}$ mm

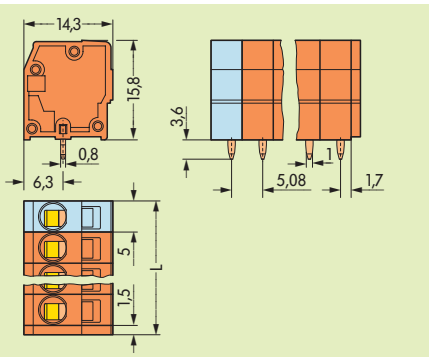

Diameter of drilled hole: $1.6^{+0.1}$ mm
L = (No. of poles - 1) x pin spacing + 5 mm + 1.5 mm

* Approvals with corresponding ratings see pages 12.3 ff.

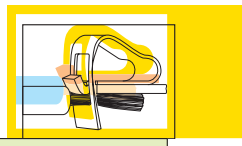

Pin spacing 7.62 mm / 0.3 in

0.08 – 2.5 mm² | **AWG 28 – 12**
400 V/6 kV/3 | **300 V, 12 A**
12 A | **300 V, 8 A**

8 – 9 mm / 0.33 in

*

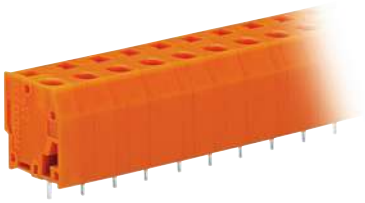

No. of poles	Item No.	Pack.-unit pcs
Terminal strips,		
orange, standard lengths,		
1 solder pin/pole		
2	**739-232**	340 (4 x 85)
3	**739-233**	220 (4 x 55)
4	**739-234**	160 (4 x 40)
5	**739-235**	120 (4 x 30)
6	**739-236**	100 (4 x 25)
7	**739-237**	80 (4 x 20)
8	**739-238**	80 (4 x 20)
9	**739-239**	60 (4 x 15)
10	**739-240**	60 (4 x 15)
12	**739-242**	40 (4 x 10)
For other lengths, please contact factory		

Marker card, 80 self-adhesive strips per card

1 – 20 (80 x)	**210-332/0762-0020**	1 card

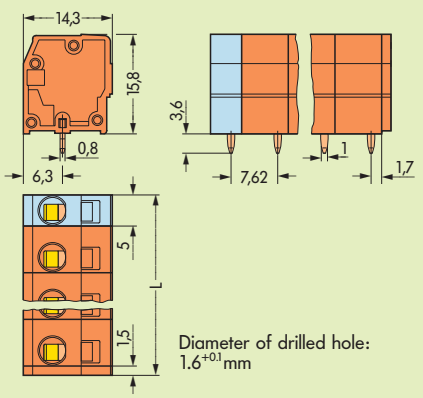

L = (No. of poles – 1) x pin spacing + 5 mm + 1.5 mm